BALAJI SWITCHGEARS

Life Is On | Schneider Electric

PriceList

LV- Power Quality Products and Equipments

With effect from January 17th, 2024

se.com/in

Contents

Power Factor Correction Products 5

EasyLogic™ PFC+ Capacitor 5

Can (Cylindrical) Type 440V Capacitors 7

Box (Square) Type 440V Capacitors 8

Detuned Filter Application Capacitors 9

VarPlus MAX Detuned Reactors 12

PFC - Detuned Reactors 13

Detuned Reactor 440V Range 13

Introducing VarPlus MAX Copper Wound Reactors 14

Copper Wound Detuned Reactor 15

Copper Wound Detuned Reactor 440V Range 15

VarPlus Logic APFC relay 16

Power Factor Correction Products 17

APFC Relays 17

PowerLogic™ PSN 18

Erstwhile Accusine™ PCS+ 18

Erstwhile Accu sine™ PCSn+ 19

Active Harmonic Filtering Solutions 20

PowerLogic™ PCS+ 20

PowerLogic™ PCSn 20

Active Harmonic Filtering Solutions 23

PowerLogicTM EVC+ 23

EasyLogic™ AP 23

Power Factor Correction Equipment 26

Discover How You Can Save Approximately 150kg CO_2 Per kVA With Smart Power Factor Correction

Premium low voltage power factor correction capacitors

With 30% size optimization and 120k lifetime hours, ensure easy installation and easy maintenance. Equip yourself with easy quality assurance with 60% more continuous current-carrying capacity while also **enabling easy savings with our 100% commitment to testing and easy combinations with 30% energy wastage reduction.**

Now, ensure reliability and safety in **Buildings, Industries, Residential buildings, OEMs, and Energy Infrastructures.**

EasyLogic™ PFC+ New

se.com

Power Factor Correction Products

Capacitor for Heavy Duty application in Easy Range

- **Rated Voltage:** 480 and 525, 50/60Hz
- **Standard compliances:** IEC 60831 part 1 & 2, IS13340 Part 1-2, BIS certification, ASTA certified
- **Green Premium:** Compliant
- **Reliability:** Specially designed di-electric with Soft resin as coolant, the combination provides it extra reliability and extended working hours
- **Size Optimization:** This optimized design and compact size helps to save the panel space while its lower weight contributes to user experience during installation

EasyLogic™ PFC+ Capacitor

Description	kVAr Rating	Minimum Ordering Quantity (No.)	Reference	Unit MRP [₹]
EasyLogic™ PFC+				
MPP-EasyLogic™ H Duty Can 3Ph 50Hz 480V	6.7		MEHVCPDY067A48	7054
MPP-EasyLogic™ H Duty Can 3Ph 50Hz 480V	11.3		MEHVCPDY113A48	7161
MPP-EasyLogic™ H Duty Can 3Ph 50Hz 480V	12.5		MEHVCPDY125A48	7215
MPP-EasyLogic™ H Duty Can 3Ph 50Hz 480V	14.4		MEHVCPDY144A48	7516
MPP-EasyLogic™ H Duty Can 3Ph 50Hz 480V	15.5		MEHVCPDY155A48	8088
MPP-EasyLogic™ H Duty Can 3Ph 50Hz 480V	17		MEHVCPDY170A48	8875
MPP-EasyLogic™ H Duty Can 3Ph 50Hz 480V	22.4		MEHVCPDY224A48	11692
MPP-EasyLogic™ H Duty Can 3Ph 50Hz 480V	25		MEHVCPDY250A48	13050
MPP-EasyLogic™ H Duty Can 3Ph 50Hz 480V	28.1		MEHVCPDY281A48	14584
MPP-EasyLogic™ H Duty Can 3Ph 50Hz 480V	31.5		MEHVCPDY315A48	16428
MPP-EasyLogic™ H Duty Can 3Ph 50Hz 525V	12.5		MEHVCPDY125A52	6521
MPP-EasyLogic™ H Duty Can 3Ph 50Hz 525V	15.4		MEHVCPDY154A52	8033
MPP-EasyLogic™ H Duty Can 3Ph 50Hz 525V	20.6		MEHVCPDY206A52	10746
MPP-EasyLogic™ H Duty Can 3Ph 50Hz 525V	25		MEHVCPDY250A52	12988
MPP-EasyLogic™ H Duty Can 3Ph 50Hz 525V	27.5		MEHVCPDY275A52	14352
MPP-EasyLogic™ H Duty Can 3Ph 50Hz 525V	30.6		MEHVCPDY306A52	15969
MPP-EasyLogic™ H Duty Can 3Ph 50Hz 525V	33.1		MEHVCPDY331A52	17259

VarPlus Box Xtreme

Built to perform in Xtreme conditions

- Designed for 60ºC, offers upto 60% more life than products designed at 55ºC
- Tested to perform upto 150,000 hrs life in standard operating conditions
- Xtreme inrush withstand of upto 350 x In
- Designed to work in Xtreme environments

se.com/in

Power Factor Correction Products

VarPlus Can

- **Performance:** High performance and flexibility
- **Offer configuration:** Available in three configurations as FastOn, Clamptite and Stud Offer
- **Product range:** 1-50 kvar from 440V-525V
- **Product compliance:** IEC 60831 Part 1-2014 and 2 -2014 compliant, **BIS Certified**, CE, CQC, UL, ASTA, Rohs and Green Premium
- **Type tested:** From LCIE France and ASTA Intertek
- **Temperature class:** Class D (+55°C for VarPlus Can)
- **Reliability:** Self healing, unique 3-phase disconnection mechanism with pressure sensitive disconnection (PSD)
- **Safety:** Tamper-proof discharge resistor, IP20 for FastOn and Clamptite offer
- **Robust design:** Al Can for casing, hermetically sealed, resin as coolant - better than gas
- **Enhanced life:** 130K hours with better current handling capacity due to wave cut films with slope metalization

Can (Cylindrical) Type 440V Capacitors

Description	kVAr Rating	Minimum Ordering Quantity (No.)	Reference	Unit MRP [₹]
EasyCan (S Duty) 440V Range				
MPP - Standard Duty Can 3Ph 2kVAr 440V 50Hz	2	3	MEHVCSDY020A44 ☑	1063
MPP - Standard Duty Can 3Ph 3kVAr 440V 50Hz	3	3	MEHVCSDY030A44 ☑	1595
MPP - Standard Duty Can 3Ph 4kVAr 440V 50Hz	4	3	MEHVCSDY040A44 ☑	2127
MPP - Standard Duty Can 3Ph 5kVAr 440V 50Hz	5	3	MEHVCSDY050A44 ☑	2177
MPP - Standard Duty Can 3Ph 7.5kVAr 440V 50Hz	7.5	3	MEHVCSDY075A44 ☑	3046
MPP - Standard Duty Can 3Ph 10kVAr 440V 50Hz	10	1	MEHVCSDY100A44 ☑	3560
MPP - Standard Duty Can 3Ph 15kVAr 440V 50Hz	15	1	MEHVCSDY150A44 ☑	5333
MPP - Standard Duty Can 3Ph 20kVAr 440V 50Hz	20	1	MEHVCSDY200A44 ☑	7112
MPP - Standard Duty Can 3Ph 25kVAr 440V 50Hz	25	1	MEHVCSDY250A44 ☑	8892
VarPlus Can (H Duty) 440V Range				
MPP - Heavy Duty Can 3Ph 1kVAr 440V 50Hz	1	3	MEHVCHDY010A44 ☑	951
MPP - Heavy Duty Can 3Ph 2kVAr 440V 50Hz	2	3	MEHVCHDY020A44 ☑	1491
MPP - Heavy Duty Can 3Ph 3kVAr 440V 50Hz	3	3	MEHVCHDY030A44 ☑	2239
MPP - Heavy Duty Can 3Ph 4kVAr 440V 50Hz	4	3	MEHVCHDY040A44 ☑	2982
MPP - Heavy Duty Can 3Ph 5kVAr 440V 50Hz	5	3	MEHVCHDY050A44 ☑	3096
MPP - Heavy Duty Can 3Ph 7.5kVAr 440V 50Hz	7.5	3	MEHVCHDY075A44 ☑	4538
MPP - Heavy Duty Can 3Ph 10kVAr 440V 50Hz	10	1	MEHVCHDY100A44 ☑	5648
MPP - Heavy Duty Can 3Ph 12.5kVAr 440V 50Hz	12.5	1	MEHVCHDY125A44 ☑	7094
MPP - Heavy Duty Can 3Ph 15kVAr 440V 50Hz	15	1	MEHVCHDY150A44 ☑	8469
MPP - Heavy Duty Can 3Ph 20kVAr 440V 50Hz	20	1	MEHVCHDY200A44 ☑	11295
MPP - Heavy Duty Can 3Ph 25kVAr 440V 50Hz	25	1	MEHVCHDY250A44 ☑	14117
MPP - Heavy Duty Can 3Ph 30kVAr 440V 50Hz	30	1	MEHVCHDY300A44 ☑	17020
MPP - Heavy Duty Can 3Ph 40kVAr 440V 50Hz(Single unit with IP00)	40	1	MEHVCHDY400A44 ☑	22108
MPP - Heavy Duty Can 3Ph 50kVAr 440V 50Hz(Single unit with IP00)	50	1	MEHVCHDY500A44 ☑	27507
VarPlus Can (GH Duty) 440V Range				
MPP - Standard Duty Can 3Ph 1kVAr 440V 50Hz	5	3	MEHVCGSF050A44	3134
MPP - Standard Duty Can 3Ph 2kVAr 440V 50Hz	7.5	3	MEHVCGSF075A44	4697
MPP - Standard Duty Can 3Ph 3kVAr 440V 50Hz	10	3	MEHVCGSF100A44	5793
MPP - Standard Duty Can 3Ph 4kVAr 440V 50Hz	12.5	3	MEHVCGSF125A44	7238
MPP - Standard Duty Can 3Ph 5kVAr 440V 50Hz	15	3	MEHVCGSF150A44	8682
MPP - Standard Duty Can 3Ph 7.5kVAr 440V 50Hz	20	3	MEHVCGSF200A44	11567
MPP - Standard Duty Can 3Ph 10kVAr 440V 50Hz	25	1	MEHVCGSF250A44	14474
MPP - Standard Duty Can 3Ph 20kVAr 440V 50Hz	50	1	MEHVCGSF500A44	28088

☑ NORMAL STOCK ITEMS

W.E.F. January 17th, 2024

Power Factor Correction Products

VarPlus Box

- **Performance:** High performance and flexibility
- **Product range:** 5-50 kvar from 440V-525V
- **Product compliance:** IEC 60831 Part 1-2014 and 2 -2014 compliant, **BIS Certified**, CE, CQC, UL, ASTA, Rohs and Green Premium
- **Type tested:** From LCIE France and ASTA Intertek
- **Temperature class:** +50°C for VarPlus Box APP, Class D (60°C for VarPlus Xtreme Box, 70°C for MD-XL)
- **Reliability:** Self healing, unique 3-phase disconnection mechanism with pressure sensitive disconnection (PSD)
- **Robust design:** Steel enclosure, resin as coolant - better than gas
- **Enhanced life:** 150K hours with better current handling capacity due to wave cut films with slope metalization

Box (Square) Type 440V Capacitors

Description	kVAr Rating	Minimum Ordering Quantity (No.)	Reference	Unit MRP [₹]
VarPlus Box Xtreme H Duty 440V Range				
MPP - Xtreme Heavy Duty Box 3Ph 5kVAr 440V 50Hz	5	1	MEHVBHDY050A44 ☑	3995
MPP - Xtreme Heavy Duty Box 3Ph 7.5kVAr 440V 50Hz	7.5	1	MEHVBHDY075A44	5988
MPP - Xtreme Heavy Duty Box 3Ph 10kVAr 440V 50Hz	10	1	MEHVBHDY100A44 ☑	6852
MPP - Xtreme Heavy Duty Box 3Ph 12.5kVAr 440V 50Hz	12.5	1	MEHVBHDY125A44	8537
MPP - Xtreme Heavy Duty Box 3Ph 15kVAr 440V 50Hz	15	1	MEHVBHDY150A44 ☑	10245
MPP - Xtreme Heavy Duty Box 3Ph 20kVAr 440V 50Hz	20	1	MEHVBHDY200A44 ☑	13723
MPP - Xtreme Heavy Duty Box 3Ph 25kVAr 440V 50Hz	25	1	MEHVBHDY250A44	17155
VarPlus Box APP 440V Range	5			
APP - Box 3Ph 5kVAr 440V 50Hz	5	1	MEHVBAPP050A44	5544
APP - Box 3Ph 10kVAr 440V 50Hz	10	1	MEHVBAPP100A44	9728
APP - Box 3Ph 15kVAr 440V 50Hz	15	1	MEHVBAPP150A44	14597
APP - Box 3Ph 20kVAr 440V 50Hz	20	1	MEHVBAPP200A44	19463
APP - Box 3Ph 25kVAr 440V 50Hz	25	1	MEHVBAPP250A44	24330
APP - Box 3Ph 30kVAr 440V 50Hz	30	1	MEHVBAPP300A44	29246

☑ NORMAL STOCK ITEMS

W.E.F. January 17th, 2024

Power Factor Correction Products

Detuned Filter Application Capacitors

Description	kVAr Rating	Minimum Ordering Quantity (No.)	Reference	Unit MRP [₹]
*** Capacitors for 7%/5.7% , 440V Detuned Filter Application**				
VarPlus Can (H Duty) 480V Range				
MPP - Heavy Duty Can 3Ph 5.6kVAr 480V 50Hz	5.6	1	MEHVCHDY056A48 ☑	3386
MPP - Heavy Duty Can 3Ph 11.3kVAr 480V 50Hz	11.3	1	MEHVCHDY113A48 ☑	6404
MPP - Heavy Duty Can 3Ph 12.5kVAr 480V 50Hz	12.5	1	MEHVCHDY125A48	7085
MPP - Heavy Duty Can 3Ph 14.4kVAr 480V 50Hz	14.4	1	MEHVCHDY144A48	8169
MPP - Heavy Duty Can 3Ph 15.5kVAr 480V 50Hz	15.5	1	MEHVCHDY155A48	8792
MPP - Heavy Duty Can 3Ph 17kVAr 480V 50Hz	17	1	MEHVCHDY170A48 ☑	9646
MPP - Heavy Duty Can 3Ph 22.4kVAr 480V 50Hz	22.4	1	MEHVCHDY224A48 ☑	12708
MPP - Heavy Duty Can 3Ph 25kVAr 480V 50Hz	25	1	MEHVCHDY250A48 ☑	14185
MPP - Heavy Duty Can 3Ph 28.1kVAr 480V 50Hz	28.1	1	MEHVCHDY281A48 ☑	15852
MPP - Heavy Duty Can 3Ph 31.5kVAr 480V 50Hz	31.5	1	MEHVCHDY315A48 ☑	17856
VarPlus Can (GH Duty) 480V Range				
MPP - GasHeavy Duty Can 3Ph 11.3kVAr 480V 50Hz	11.3	1	MEHVCGSF113A48 ☑	6539
MPP - GasHeavy Duty Can 3Ph 12.5kVAr 480V 50Hz	12.5	1	MEHVCGSF125A48	7232
MPP - GasHeavy Duty Can 3Ph 15.5kVAr 480V 50Hz	15.5	1	MEHVCGSF155A48	8970
MPP - GasHeavy Duty Can 3Ph 22.4kVAr 480V 50Hz	22.4	1	MEHVCGSF224A48 ☑	12961
MPP - GasHeavy Duty Can 3Ph 25kVAr 480V 50Hz	25	1	MEHVCGSF250A48 ☑	14465
MPP - GasHeavy Duty Can 3Ph 28.1kVAr 480V 50Hz	28.1	1	MEHVCGSF281A48 ☑	16320
MPP - GasHeavy Duty Can 3Ph 31.5kVAr 480V 50Hz	31.5	1	MEHVCGSF315A48 ☑	18295
VarPlus Box Xtreme H Duty 480V Range				
MPP - Xtreme Heavy Duty Box 3Ph 5.6kVAr 480V 50Hz	5.6	1	MEHVBHDY056A48	4472
MPP - Xtreme Heavy Duty Box 3Ph 25kVAr 480V 50Hz	25	1	MEHVBHDY250A48 ☑	17007
MPP - Xtreme Heavy Duty Box 3Ph 28.1kVAr 480V 50Hz	28.1	1	MEHVBHDY281A48 ☑	19205
MPP - Xtreme Heavy Duty Box 3Ph 31.5kVAr 480V 50Hz	31.5	1	MEHVBHDY315A48	21422

* Refer to Selection chart for Reactors & Capacitors available on page 16

☑ NORMAL STOCK ITEMS

W.E.F. January 17th, 2024

Power Factor Correction Products

Detuned Filter Application Capacitors

Description	kVAr Rating	Minimum Ordering Quantity (No.)	Reference	Unit MRP [₹]
VarPlus Box APP 480V Range				
APP - Box 3Ph 5.6kVAr 480V 50Hz	5.6	1	MEHVBAPP056A48 ☑	6202
APP - Box 3Ph 11.3kVAr 480V 50Hz	11.3	1	MEHVBAPP113A48 ☑	11012
APP - Box 3Ph 14.4kVAr 480V 50Hz	14.4	1	MEHVBAPP144A48	14033
APP - Box 3Ph 22.4kVAr 480V 50Hz	22.4	1	MEHVBAPP224A48 ☑	21855
APP - Box 3Ph 25kVAr 480V 50Hz	25	1	MEHVBAPP250A48	24334
APP - Box 3Ph 28.1kVAr 480V 50Hz	28.1	1	MEHVBAPP281A48 ☑	27348
APP - Box 3Ph 31.5kVAr 480V 50Hz	31.5	1	MEHVBAPP315A48	30660
*** Capacitors for 7%/ 5.7%/ 14%, 440V Filter Application**				
VarPlus Can (H Duty) 525V Range				
MPP - Heavy Duty Can 3Ph 6.9kVAr 525V 50Hz	6.9	1	MEHVCHDY069A52 ☑	4177
MPP - Heavy Duty Can 3Ph 12.5kVAr 525V 50Hz	12.5	1	MEHVCHDY125A52 ☑	7089
MPP - Heavy Duty Can 3Ph 13.8kVAr 525V 50Hz	13.8	1	MEHVCHDY138A52 ☑	7827
MPP - Heavy Duty Can 3Ph 15.4kVAr 525V 50Hz	15.4	1	MEHVCHDY154A52 ☑	8732
MPP - Heavy Duty Can 3Ph 20.6kVAr 525V 50Hz	20.6	1	MEHVCHDY206A52 ☑	11681
MPP - Heavy Duty Can 3Ph 25kVAr 525V 50Hz	25	1	MEHVCHDY250A52 ☑	14117
MPP - Heavy Duty Can 3Ph 27.5kVAr 525V 50Hz	27.5	1	MEHVCHDY275A52	15601
MPP - Heavy Duty Can 3Ph 30.6kVAr 525V 50Hz	30.6	1	MEHVCHDY306A52 ☑	17357
MPP - Heavy Duty Can 3Ph 33.1kVAr 525V 50Hz	33.1	1	MEHVCHDY331A52 ☑	18759
MPP - Heavy Duty Can 3Ph 37.7kVAr 525V 50Hz	37.7	1	MEHVCHDY377A52 ☑	21364
VarPlus Can (GH Duty) 525V Range				
MPP - GasHeavy Duty Can 3Ph 6.9kVAr 525V 50Hz	6.9	1	MEHVCGSF069A52	4334
MPP - GasHeavy Duty Can 3Ph 12.5kVAr 525V 50Hz	12.5	1	MEHVCGSF125A52	7257
MPP - GasHeavy Duty Can 3Ph 25kVAr 525V 50Hz	25	1	MEHVCGSF250A52	14515
MPP - GasHeavy Duty Can 3Ph 27.5kVAr 525V 50Hz	27.5	1	MEHVCGSF275A52	15982
MPP - GasHeavy Duty Can 3Ph 30.6kVAr 525V 50Hz	30.6	1	MEHVCGSF306A52 ☑	17779
MPP - GasHeavy Duty Can 3Ph 33.1kVAr 525V 50Hz	33.1	1	MEHVCGSF331A52	19234
MPP - GasHeavy Duty Can 3Ph 37.7kVAr 525V 50Hz	37.7	1	MEHVCGSF377A52	21861

* Refer to Selection chart for Reactors & Capacitors available on page 16

Power Factor Correction Products

Detuned Filter Application Capacitors

Description	kVAr Rating	Minimum Ordering Quantity (No.)	Reference	Unit MRP ₹
VarPlus Box Xtreme H Duty 525V Range				
MPP - Xtreme Heavy Duty Box 3Ph 25kVAr 525V 50Hz	25	1	MEHVBHDY250A52	17071
MPP - Xtreme Heavy Duty Box 3Ph 33.1kVAr 525V 50Hz	33.1	1	MEHVBHDY331A52	22704
VarPlus Box APP 525V Range				
APP - Box 3Ph 12.5kVAr 525V 50Hz	12.5	1	MEHVBAPP125A52	12165
APP - Box 3Ph 13.8kVAr 525V 50Hz	13.8	1	MEHVBAPP138A52	13425
APP - Box 3Ph 20.6kVAr 525V 50Hz	20.6	1	MEHVBAPP206A52	20051
APP - Box 3Ph 25kVAr 525V 50Hz	25	1	MEHVBAPP250A52	24336
APP - Box 3Ph 27.5kVAr 525V 50H	27.5	1	MEHVBAPP275A52	26769
APP - Box 3Ph 30.6kVAr 525V 50Hz	30.6	1	MEHVBAPP306A52	29799
APP - Box 3Ph 33.1kVAr 525V 50Hz	33.1	1	MEHVBAPP331A52	32216
APP - Box 3Ph 37.7kVAr 525V 50Hz	37.7	1	MEHVBAPP377A52	36712

Refer to Selection chart for Reactors & Capacitors available on page 16

VarPlus MAX Detuned Reactors

MAXimize Efficiency
MAXimize Savings

se.com/in

PFC - Detuned Reactors

VarPlus Max Detuned Reactor

- **Performance:** Designed to operate at a stringent harmonic spectrum as per IEEE 519
- **Offer configuration:** 6.5 - 100 kvar, 440V
- **Product range:** Single footprint from 6.5 - 100 kvar
- **Product compliance:** Compliant to IEC 60076-6
- **Type tested:** Certified by CPRI
- **Temperature class:** Class H for insulation <=180°C
- **Reliability:** Conductor design, designed as per maximum permissible current (I_{mp})
- **Safety:** Built-in thermal protection

Detuned Reactor 440V Range

Description	kVAr Rating	Minimum Ordering Quantity (No.)	Reference	Unit MRP [₹]
VarPlus MAX Detuned Reactor 5.7%, 440V Range				
VarPlus MAX AL Detuned reactor 20 kVAr 440V 5.7 % 50Hz	20	1	LVR05200A44LO	31829
VarPlus MAX AL Detuned reactor 25 kVAr 440V 5.7 % 50Hz	25	1	LVR05250A44LO	32890
VarPlus MAX AL Detuned reactor 50 kVAr 440V 5.7 % 50Hz	50	1	LVR05500A44LO	49210
VarPlus MAX AL Detuned reactor 100 kVAr 440V 5.7 % 50Hz	100	1	LVR05X00A44LO	98386
VarPlus MAX Detuned Reactor 7%, 440V Range				
VarPlus MAX AL Detuned reactor 5 kVAr 440V 7% 50Hz	5	1	LVR07050A44LO ☑	14297
VarPlus MAX AL Detuned reactor 10 kVAr 440V 7% 50Hz	10	1	LVR07100A44LO ☑	20662
VarPlus MAX AL Detuned reactor 12.5 kVAr 440V 7% 50Hz	12.5	1	LVR07125A44LO ☑	23627
VarPlus MAX AL Detuned reactor 15 kVAr 440V 7% 50Hz	15	1	LVR07150A44LO ☑	25053
VarPlus MAX AL Detuned reactor 20 kVAr 440V 7% 50Hz	20	1	LVR07200A44LO ☑	26593
VarPlus MAX AL Detuned reactor 25 kVAr 440V 7% 50H	25	1	LVR07250A44LO ☑	26602
VarPlus MAX AL Detuned reactor 50 kVAr 440V 7% 50Hz	50	1	LVR07500A44LO ☑	41081
VarPlus MAX AL Detuned reactor 75 kVAr 440V 7% 50Hz	75	1	LVR07750A44LO ☑	64074
VarPlus MAX AL Detuned reactor 100 kVAr 440V 7% 50Hz	100	1	LVR07X00A44LO ☑	82994
VarPlus MAX Detuned Reactor 14%, 440V Range				
VarPlus MAX AL Detuned reactor 10 kVAr 440V 14 % 50Hz	10	1	LVR14100A44LO	22198
VarPlus MAX AL Detuned reactor 15 kVAr 440V 14 % 50Hz	15	1	LVR14150A44LO	32396
VarPlus MAX AL Detuned reactor 25 kVAr 440V 14 % 50Hz	25	1	LVR14250A44LO ☑	40680
VarPlus MAX AL Detuned reactor 50 kVAr 440V 14 % 50Hz	50	1	LVR14500A44LO ☑	67852
VarPlus MAX AL Detuned reactor 100 kVAr 440V 14 % 50Hz	100	1	LVR14X00A44LO	140316

☑ NORMAL STOCK ITEMS

W.E.F. January 17th, 2024

Introducing VarPlus MAX Copper Wound Reactors

se.com/in

Copper Wound Detuned Reactor

VarPlus Max Copper Detuned Reactors

- **MAXimize your selection**
  - Wide range available in Copper windings.
- **MAXimize your OPEX optimization**
  - Up to 30% lower losses to reduce your OPEX
- **MAXimize your thermal efficiency**
  - Up to 20% lower working temperatures
- **MAXimize your operational efficiency**
  - Design current up to 1.3 x Rated Current
  - Saturation current limit up to 2.0 x Rated Current
  - Designed for Harsh environments (Maximum voltage harmonic limit up to 9%)

Copper Wound Detuned Reactor 440V Range

Description	kVAr Rating	Minimum Ordering Quantity (No.)	Reference	Unit MRP ₹
Varplus Copper Detuned Reactor 7%, 440V Range				
Detuned Reactor CU 5kVAr 440V 7% 50Hz	5	1	LVR07050A44CU	17415
Detuned Reactor CU 10kVAr 440V 7% 50Hz	10	1	LVR07100A44CU	28454
Detuned Reactor CU 12.5kVAr 440V 7% 50Hz	12.5	1	LVR07125A44CU	30259
Detuned Reactor CU 15kVAr 440V 7% 50Hz	15	1	LVR07150A44CU	34499
Detuned Reactor CU 20kVAr 440V 7% 50Hz	20	1	LVR07200A44CU	36620
Detuned Reactor CU 25kVAr 440V 7% 50Hz	25	1	LVR07250A44CU	42216
Detuned Reactor CU 50kVAr 440V 7% 50Hz	50	1	LVR07500A44CU	71800
Detuned Reactor CU 100kVAr 440V 7% 50Hz	100	1	LVR07X00A44CU	131865
Varplus Copper Detuned Reactor 14%, 440V Range				
Detuned Reactor CU 10kVAr 440V 14% 50Hz	10	1	LVR14100A44CU	34758
Detuned Reactor CU 25kVAr 440V 14% 50Hz	25	1	LVR14250A44CU	67615
Detuned Reactor CU 50kVAr 440V 14% 50Hz	50	1	LVR14500A44CU	112783

VarPlus Logic APFC relay

- Automatic Initialization & sequence detection
- Measurement of Step kVAr & THDv up to 19th
- RS485 port as default feature
- 4 Quadrant measurement
- Dual Cos phi settings for two source operation

se.com/in

Power Factor Correction Products

APFC Relays

Description	No. of Step	Minimum Ordering Quantity (No.)	Reference	Unit MRP ₹
Varlogic APFC Relays - Classic Range				
RT6, 6 step, 440V, 5A	6	1	51207	20782
RT8, 8 step, 440V, 5A	8	1	51209	26936
RT12, 12 step, 440V, 5A	12	1	51213	31251
VarPlus Logic APFC Relays - Advanced Range				
VPL06, 6 step LCD Display , 90V - 550V 50/60Hz 1A/5A **with RS485**	6	1	VPL06N ☑	46295
VPL12, 12 step LCD Display , 90V - 550V 50/60Hz 1A/5A **with RS485**	12	1	VPL12N ☑	49988

☑ NORMAL STOCK ITEMS

W.E.F. January 17th, 2024

PowerLogic™ PCS+

Erstwhile Accusine™ PCS+

- All in one: Harmonics, PF, Load unbalance, Flicker
- Fully selectable from 2nd to 51st order of harmonics
- Flexible CT connection: Load side/ source side
- Suitable to work in Harsh environment including marine application
- Product Certification & Design references: IEC 61439-1, L (UL508), CE Certified, ABS
- Fastest control response time of 25Micro second
- Connectable to power management software (EcoStruxure PME) - real time performance and temperature monitoring

Industry segment

Heavy Industry | Oil & Gas (on/off shore) | Marine | Water Wastewater | Processing plants | Mining

Infrastructure & Building segment

Airport | HVAC | Healthcare

se.com/in

PowerLogic™ PCSn

Erstwhile Accu sine™ PCS+

Discover the new PowerLogic™ PCSn

Your 3-phase + neutral active harmonic filter
Clean up your current

- Units design to work in high ambient temp up to 50 Deg C
- 3 Level IGBT to meet tough target requirements from Utilities
- 3-in-1 Harmonic Correction, PF improvement, Main current balancing
- Connectable to power management software (EcoStruxure PME) - real time performance and temperature monitoring
- Also available in rack module

Building segment

Heavy Industry | Retail space | Healthcare | Hotel & Casino | Life sciences & University | Datacenter Cloud Farm

Industry segment

Light Industry | Food & Beverage

se.com/in

Active Harmonic Filtering Solutions

PowerLogic™ PCS+

- 3 Ph, 3 wire connection
- From 208V to 690V supply
- Parallel connection up to 10 units
- Harmonic cancellation spectrum from 2nd to 51st order of current harmonics
- Load balancing of source current
- DPF correction
- Can be used with PF capacitors as Hybrid VAR compensation (HVC) system

PowerLogic™ PCS+

Description	Amperage	Minimum Ordering Quantity (No.)	Reference	Unit MRP ₹
PowerLogic™ PCS+				
PowerLogic™ PCS+ 60A 380V- 480V 50- 60Hz IP00	60	1	PCSP060D5IP00	On Request
PowerLogic™ PCS+ 120A 380V - 480V 50- 60Hz IP00	120	1	PCSP120D5IP00	On Request
PowerLogic™ PCS+ 200A 380V- 480V 50- 60Hz IP00	200	1	PCSP200D5IP00	On Request
PowerLogic™ PCS+ 300A 380V- 480V 50- 60Hz IP00	300	1	PCSP300D5IP00	On Request
PowerLogic™ PCS+ 60A 380V- 480V 50- 60Hz IP31	60	1	PCSP060D5IP31	On Request
PowerLogic™ PCS+ 120A 380V - 480V 50- 60Hz IP31	120	1	PCSP120D5IP31	On Request
PowerLogic™ PCS+ 200A 380V- 480V 50- 60Hz IP31	200	1	PCSP200D5IP31	On Request
PowerLogic™ PCS+ 300A 380V- 480V 50- 60Hz IP31	300	1	PCSP300D5IP31	On Request
PowerLogic™ PCS+ 60A 380V-480V 50- 60Hz IP54	60	1	PCSP060D5IP54	On Request
PowerLogic™ PCS+ 120A 380V-480V 50- 60Hz IP54	120	1	PCSP120D5IP54	On Request
PowerLogic™ PCS+ 200A 380V- 480V 50- 60Hz IP54	200	1	PCSP200D5IP54	On Request
PowerLogic™ PCS+ 300A 380V- 480V 50- 60Hz IP54	300	1	PCSP300D5IP54	On Request

Note: Active Harmonic Filter prices On Request

PowerLogic™ PCSn

Clean up your current

- Units design to work in high ambient temp up to 50 Deg C
- 3 Level IGBT to meet tough target requirements from Utilities
- 3-in-1 Harmonic Correction, PF improvement, Main current balancing
- 3 Phase neutral compensation

PowerLogic™ PCSn

Description	Amperage	Minimum Ordering Quantity (No.)	Reference	Unit MRP ₹
PowerLogic™ PCSn				
PowerLogic™ PCSn 30A 208-415Vac 3ph+N chassis IP00	30	1	PCSN030Y4CH00	On Request
PowerLogic™ PCSn 60A 208-415Vac 3ph+N chassis IP00	60	1	PCSN060Y4CH00	On Request
PowerLogic™ PCSn 30A 208-415Vac 3ph+N wall mount IP20	30	1	PCSN030Y4W20	On Request
PowerLogic™ PCSn 60A 208-415Vac 3ph+N wall mount IP20	60	1	PCSN060Y4W20	On Request
PowerLogic™ PCSn 30A 208-415Vac 3ph+N rack mount 19"	30	1	PCSN030Y4R19	On Request
PowerLogic™ PCSn 60A 208-415Vac 3ph+N rack mount 19"	60	1	PCSN060Y4R19	On Request

Note: Active Harmonic Filter prices On Request

PowerLogic™ EVC+

Step less electronic VAR compenstaion

- Stepless power factor correction
- Reduce current harmonics
- Designed for fast changing loads
- Product Certification & Design references: IEC 61439-1, (UL508), CE Certified, ABS
- Robust design: Design for 50degree C without derating
- Connectable to power management software (EcoStruxure PME)- real time performance and temperature monitoring

Building segment

Heavy Industry | Retail space | Healthcare | Hotel & Casino | Life sciences & University | Datacenter Cloud Farm

Industry segment

Light Industry | Food & Beverage

se.com/in

EasyLogic™ APF

• Compact • Economical • Scalable

- Stepless power factor correction
- Reduce current harmonics
- Correct network imbalance
- Designed for fast changing loads
- Fully certified
- Robust design: Design for 50degree C without derating
- Connectable to power management software (EcoStruxure PME) - real time performance and temperature monitoring

Building segment

Retail space | Healthcare | Hotel & Casino | Life sciences & University | Datacenter Cloud Farm

Industry segment

Light Industry | Food & Beverage

se.com/in

Active Harmonic Filtering Solutions

PowerLogic™ EVC+

- Withstand up to +50°C without derating
- QR code for quick access to supporting field documentation and digital logbook
- Connectivity-ready , Cybersecure , Seismically tested to 2.47g ,Built-in EMC filter
- USB communications port
  - Firmware upgrades • Download commissioning report, diagnostic files
- Available with IP00, IP20 and IP31

PowerLogic EVC+

Description	Amperage	Minimum Ordering Quantity (No.)	Reference	Unit MRP [₹]
PowerLogic™ EVC+ New				
PowerLogic™ EVC+ 100kVAR 208-480V IP00 chassis _Marine	100	1	EVCM100D5CH00	On Request
PowerLogic™ EVC+ 100kVAR 208-480V IP21_Marine	100	1	EVCM100D5W21	On Request
PowerLogic™ EVC+ 75kVAR 208-480V IP00 chassis	75	1	EVCP075D5CH00	On Request
PowerLogic™ EVC+ 75kVAR 208-480V IP20	75	1	EVCP075D5W20	On Request
PowerLogic™ EVC+ 75kVAR 208-480V IP31 WM	75	1	EVCP075D5W31	On Request
PowerLogic™ EVC+ 100kVAR 208-480V IP00	100	1	EVCP100D5CH00	On Request
PowerLogic™ EVC+ 100kVAR 208-480V IP20 WM	100	1	EVCP100D5W20	On Request
PowerLogic™ EVC+ 100kVAR 208-480V IP31 WM	100	1	EVCP100D5W31	On Request

Note: Active Harmonic Filter prices On Request

EasyLogic™ APF

- 3 Ph, 4 wire connection
- Parallel connection up to 8 units
- Load balancing of source current
- DPF correction
- Can be used with PF capacitors as Hybrid VAR compensation (HVC) system

EasyLogic™ APF

Description	Amperage	Minimum Ordering Quantity (No.)	Reference	Unit MRP [₹]
EasyLogic™ APF New				
EasyLogic™ APF 50A 400V wall mount IP20	50	1	EZAPF05044W20	On Request
EasyLogic™ APF 100A 400V wall mount IP20	100	1	EZAPF10044W20	On Request
EasyLogic™ APF 150A 400V wall mount IP20	150	1	EZAPF15044W20	On Request
EasyLogic™ APF 50A 400V wall mount IP31	50	1	EZAPF05044W31	On Request
EasyLogic™ APF 100A 400V wall mount IP31	100	1	EZAPF10044W31	On Request
EasyLogic™ APF 150A 400V wall mount IP31	150	1	EZAPF15044W31	On Request
EasyLogic™ APF 50A 400V rack mount IP20	50	1	EZAPF05044R20	On Request
EasyLogic™ APF 100A 400V rack mount IP20	100	1	EZAPF10044R20	On Request
EasyLogic™ APF 150A 400V rack mount IP20	150	1	EZAPF15044R20	On Request
EasyLogic™ APF 7" HMI for rack and wall mount	-	1	EZAPF070HMI	On Request

Note: Active Harmonic Filter prices On Request

Digitize your power factor correction

PowerLogic™ PFC Capacitor Bank

Every electrical network can benefit from power factor correction. It's the fastest way to save money and improve energy efficiency.

An EcoStruxure™-ready PowerLogic™ PFC capacitor bank solution provides industry-leading diagnostics and IoT connectivity for superior performance monitoring and optimized maintenance.

Energy efficiency

- Lower utility bills by avoiding power factor penalties, lowering demand charges
- Unlock extra system capacity to expand and serve additional loads
- Increase equipment performance and lifespan with improved voltage
- Reduce CO2 emissions with improved power efficiency

Reliability and performance

- With smart controller, embedded environmental sensors and energy gateway server
- Notify when problems are detected or maintenance is needed
- Self-monitoring and ready to connect to any system

Built to the highest standards

- Save time and effort with easy capacitor bank configuration selection and installation
- Tested and certified according to IEC 61439-1 & 2 and IEC 61921
- Engineered for safety and advanced performance
- Robust enclosure system with heavy-duty capacitors and detuned reactors
- Optimized for remote monitoring and preventative maintenance

Remote power factor monitoring center

12 months
return on investment*

* Figures based on previous customer performance. Not a guarantee of performance in every case.

se.com/PowerLogicPFC

se.

Gain operational intelligence with connected architectures

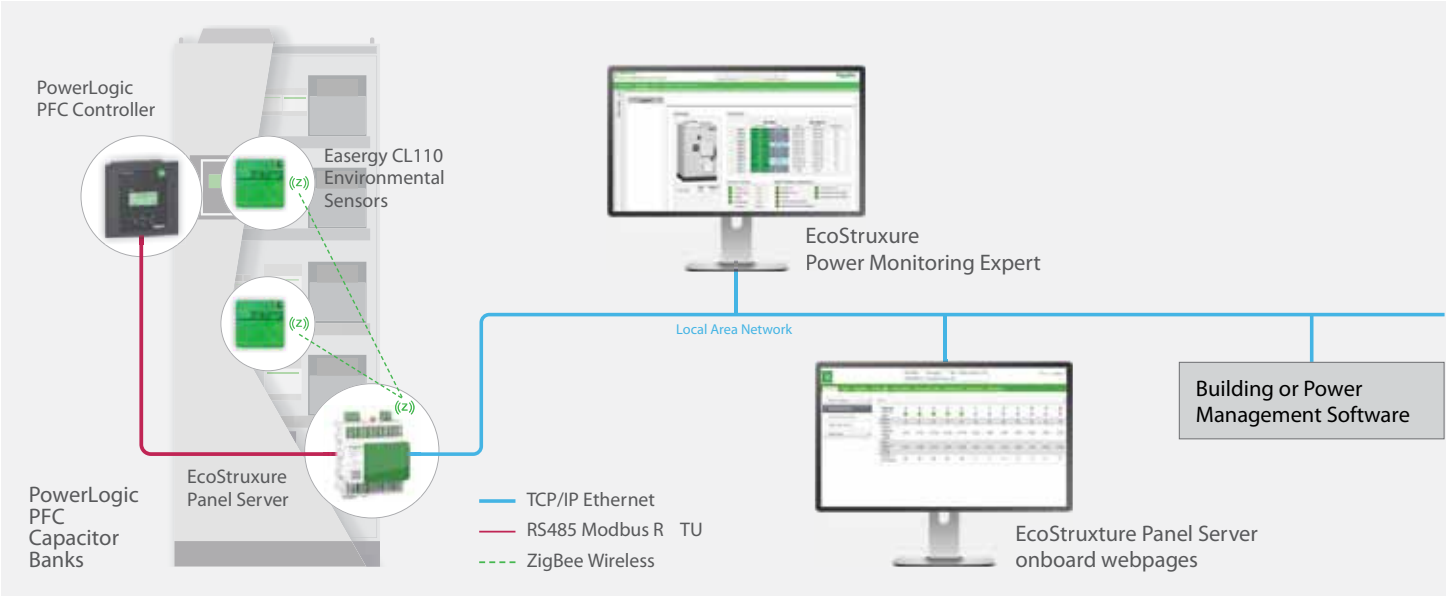

PowerLogic™ PFC Controller

- Intelligent capacitor bank controller manages reactive power levels
- Provides real-time measurements for voltage, current, power factor, power, THD and individual harmonics up to 19th harmonic
- Built-in temperature sensor with fan control
- Provides alarms for over/under voltage, low/high current, under/over compensation alarms, faulty step alarm with step number, individual step derating of capacitor indicator, total harmonic distortion alarm at 7% THDv

Smart environmental sensors (Optional Feature)

- Wireless environmental sensor measures surface temperature in contact (Tc) and humidity (RH)
- Two CL110, fixed in predefined locations in the Capacitor Bank, are paired with Zigbee-equipped PAS800 to communicate temperature and humidity values

Efficient gateway server (Optional Feature)

- Collects condition-monitoring data and alarms from PowerLogic™ PFC controller via Modbus RTU communications
- Collects enclosure temperature and humidity data from Easergy CL110 environmental sensors via ZigBee wireless communications
- Provides power information, key operational indicators, and alarms directly via onboard webpages and to remote software systems via Modbus TCP communications
- Fully supported by EcoStruxure Power Monitoring Expert (v9.0+) software

Featurres	Architecture 1 (Edge - basic)	Architecture 2 (Edge - advanced)	Architecture 3 (Apps & analytics)
Web page	Embedded EcoStruxure Panel Server pages	PME web pages	-
Customized web report	-	In PME for VPL and CL110	-
Dashboard and report	Predefined in EcoStruxure Panel Server for VPL and CL110	Predefined in PME	-
Events adn alarms	Predefined in EcoStruxure Panel Server web pages	Predefined dashboards in PME	-
Advanced reporting	-	Predefined dashboards in PME	-
Temperature & safety monitoring	Predefined in EcoStruxure Panel Server web pages	Predefined dashboards in PME	-

Power Factor Correction Equipment

Reliable

Achieves Target set PF
Reduces demand kVA
> Eliminates PF Penalty
Specify what exactly it means
Fuel savings in DG

Safe

> Burst proof capacitors
Detuned Reactors- No Harmonic Amplification
Minimum switching transient

Embedded Intelligence

Auto start, Auto detection, Auto polarity check, Auto c/k
Thermal intelligence
Harmonic intelligence
> Asset management and performance
> PQ Disturbance detection (Optional)

Digitize

Flexible to move to connected world
Web page monitor facility through
Schneider Gateway devices (Optional)
> Seam less integration with PME, PSE

Quality of construction

Compliance to and which Indian Standards
> Stringent quality control measures
> Best Engineering practices
> Best thermal design for heat dissipation

ISO 9001 ISO 14001
ISO 50001

IGBC Green building
Gold medal

IEC

ROHS

REACH

Indian Standards

☑ NORMAL STOCK ITEMS

W.E.F. January 17th, 2024

Power Factor Correction Equipment

VarSet LV APFC panels without reactors

Panel Ratings	Step Configuration in kVAr	Cat Reference No.	Dimensions (in mm) W x D x H	Unit MRP [₹]
APFC Ratings (kVAr)				
100	3x10kVAr + 1x20kVAr + 1x50kVAr	VCLVW0C10100B6M	800 x 800 x 2325	On Request
125	2x12.5kVAr + 2x25kVAr + 1x50kVAr	VCLVW0C10125B6M	800 x 800 x 2325	On Request
150	2x12.5kVAr + 1x25kVAr + 2x50kVAr	VCLVW0C12150B6M	800 x 800 x 2325	On Request
200	2x12.5kVAr + 1x25kVAr + 3x50kVAr	VCLVW0C16200B6M	800 x 800 x 2325	On Request
250	2x12.5kVAr + 1x25kVAr + 4x50kVAr	VCLVW0C20250B6M	1200 x 800 x 2325	On Request
300	2x12.5kVAr + 1x25kVAr + 5x50kVAr	VCLVW0C24300B6M	1200 x 800 x 2325	On Request
350	2x12.5kVAr + 1x25kVAr + 6x50kVAr	VCLVW0C28350B6M	1200 x 800 x 2325	On Request
400	2x25kVAr + 3x50kVAr + 2x100kVAr	VCLVW0C16400B6M	1200 x 800 x 2325	On Request
500	2x25kVAr + 3x50kVAr + 3x100kVAr	VCLVW0C20500B6M	1200 x 800 x 2325	On Request
APFC Ratings (kVAr)				
500	2x25kVAr + 3x50kVAr + 3x100kVAr	VCLVW0C20500B6A	1200 x 800 x 2325	On Request
600	2x25kVAr + 3x50kVAr + 4x100kVAr	VCLVW0C24600B6A	1400 x 800 x 2325	On Request
700	2x25kVAr + 3x50kVAr + 5x100kVAr	VCLVW0C28700B6A	1400 x 800 x 2325	On Request
750	2x25kVAr + 4x50kVAr + 5x100kVAr	VCLVW0C30750B6A	1400 x 800 x 2325	On Request
800	2x25kVAr + 3x50kVAr + 6x100kVAr	VCLVW0C32800B6A	2000 x 800 x 2325	On Request
900	2x25kVAr + 3x50kVAr + 7x100kVAr	VCLVW0C36900B6A	2000 x 800 x 2325	On Request
1000	2x25kVAr + 1x50kVAr + 9x100kVAr	VCLVW0C40X00B6A	2000 x 800 x 2325	On Request

Cat Reference Creation

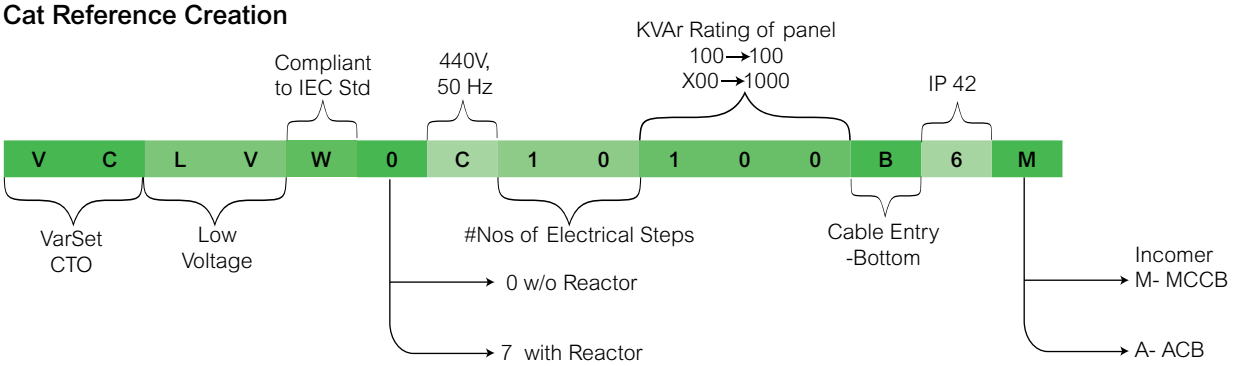

Product offer:

VarSet LV APFC panels with 7% / without Reactors

Ratings = 100kVAr to 1000kVAr
Capacitor = MPP HD Can 440/480V, with 3ph simultaneous PSD

General Features:

System voltage = 440V
Frequency = 50Hz
Phase = 3
Design = Modular
IP = IP42
Switching = Random

Incomer:

Upto 350kVAr = MCCB, 36kA
From 350 to 500kVAr = MCCB, 50kA
From 500 to 1000kVAr = ACB, 65kA
Step protection = MCCBs, 36kA

Switching:

Capacitor duty Contactor - without Reactor design

Power Contactors - with Reactor design

Power Factor Correction Equipment

Branch Protection: MCCB

> **Branch Protection: MCCB**
- Reduces thermal stresses on the electrical distribution network
- Unique electrical fault trip indication (SDE)

Capacitor: LV Shunt MPP FILM

> **Capacitor: LV MPP film**
- IEC 60831-1,2 Compliant
- Unique Pressure sensitive disconnector
- Class D (+55degC)

Detuned Reactor: Cu Wound

> **Detuned Reactor: Cu Wound**
- Compliant to IEC 60076-6
- Class H insulation (180 °C)
- Inbuilt thermal protection

Incomer: ACB/MCCB

> **Incomer: ACB/MCCB**
- No derating upto 55°C as per IEC-60947 Part 1 & 2
- Fastest Breaking time <25ms

APFC Controller: Varlogic RT/ VarPlus Logic VPL

> **APFC Controller: Varlogic RT/ VarPlus Logic VPL**
- Most Intelligent PFC relay in market with 6, 8, 12 steps
- Ready to communicate with dedicated RS485 port

VarSet LV APFC panels with 7% reactors

Panel Ratings	Step Configuration in kVAr	Cat Reference No.	Dimensions (in mm)W x D x H	Unit MRP [₹]
APFC Ratings (kVAr)				
100	3x10kVAr + 1x20kVAr + 1x50kVAr	VCLVW7C10100B6M	1200 x 800 x 2325	On Request
125	2x12.5kVAr + 2x25kVAr + 1x50kVAr	VCLVW7C10125B6M	1200 x 800 x 2325	On Request
150	2x12.5kVAr + 1x25kVAr + 2x50kVAr	VCLVW7C12150B6M	1200 x 800 x 2325	On Request
200	2x12.5kVAr + 1x25kVAr + 3x50kVAr	VCLVW7C16200B6M	1200 x 800 x 2325	On Request
250	2x12.5kVAr + 1x25kVAr + 4x50kVAr	VCLVW7C20250B6M	1800 x 800 x 2325	On Request
300	2x12.5kVAr + 1x25kVAr + 5x50kVAr	VCLVW7C24300B6M	1800 x 800 x 2325	On Request
350	2x12.5kVAr + 1x25kVAr + 6x50kVAr	VCLVW7C28350B6M	1800 x 800 x 2325	On Request
400	2x25kVAr + 3x50kVAr + 2x100kVAr	VCLVW7C16400B6M	1800 x 800 x 2325	On Request
500	2x25kVAr + 3x50kVAr + 3x100kVAr	VCLVW7C20500B6M	1800 x 800 x 2325	On Request
APFC Ratings (kVAr)				
500	2x25kVAr + 3x50kVAr + 3x100kVAr	VCLVW7C20500B6A	1800 x 800 x 2325	On Request
600	2x25kVAr + 3x50kVAr + 4x100kVAr	VCLVW7C24600B6A	2200 x 800 x 2325	On Request
700	2x25kVAr + 3x50kVAr + 5x100kVAr	VCLVW7C28700B6A	2200 x 800 x 2325	On Request
750	2x25kVAr + 4x50kVAr + 5x100kVAr	VCLVW7C30750B6A	2200 x 800 x 2325	On Request
800	2x25kVAr + 3x50kVAr + 6x100kVAr	VCLVW7C32800B6A	3200 x 800 x 2325	On Request
900	2x25kVAr + 3x50kVAr + 7x100kVAr	VCLVW7C36900B6A	3200 x 800 x 2325	On Request
1000	2x25kVAr + 1x50kVAr + 9x100kVAr	VCLVW7C40X00B6A	3200 x 800 x 2325	On Request

Note:
VarSet prices will be On Request

☑ NORMAL STOCK ITEMS

W.E.F. January 17th, 2024

Note

Note

Life Is On | Schneider Electric

Schneider Electric India Pvt. Ltd.

Corporate Office: 9th Floor, DLF Building No. 10, Tower C, DLF Cyber City, Phase II, Gurugram 122002 Haryana
Tel.: ++91 124 6899000 Fax: ++91 124 4222036/037

Ahmedabad
Schneider Electric India (P) Ltd.
1506-1507, 15th Floor Shapth-5
Opp.Karnavati Club, SG Highway,
Ahmedabad, Gujarat - 380015
Tel.: 079-66826701

Bengaluru
Schneider Electric India (P) Ltd.
No. 3/1, JP Techno Park
Mezzanine Floor, Millers Tank Bund
Road, Vasanth Nagar
Bengaluru - 560052
Tel.: 080-71481351

Bhubaneswar
Schneider Electric India (P) Ltd.
Workloop Co-Working in the property Office No. 316, Esplanade One Mall
Rasulgarh, Bhubaneswar - 751010

Chennai
Schneider Electric India (P) Ltd.
No: 29, 2nd Floor,
Bannari Amman Towers, B-Block
Dr. Radhakrishnan Road, Mylapore
Chennai - 600 004
Tel.:044-71912000

Cochin
Schneider Electric India (P) Ltd.
Alapatt Properties Private Limited
(Trade Name : Centre A)
Main Door Number : 66/4971
(Old Door Number: 40/6584-H)
7th Floor Alapatt Heritage Building
MG Road Kochi - 682035

Coimbatore
Schneider Electric India (P) Ltd.
Hanudev Info Tech Park, 6th Floor
Unit No. Block-C, SF No. 558/2
Udalyampalayam Road, Nava India
Coimbatore - 641028

Hyderabad
Schneider Electric India (P) Ltd.
D.No. 1-8-271, # 401, Ashoka
Bhoopal Chambers, SP Road
Secunderabad - 500003
Tel.: 040-67219500

Indore
Schneider Electric India (P) Ltd.
219, Dhan Trident Building
Vijay Nagar, A.B.Road
Indore - 452001

Jaipur
Schneider Electric India (P) Ltd.
Jaipur Business Centre 309
3rd Floor, Sangam Tower 190
Church Road, Jaipur - 302001
Tel.: 0141-2374810

Kolkata
Schneider Electric (I)Pvt.Ltd,
BP-4, Sector-V, Technopolis
3rd Floor, Salt Lake City
Kolkata - 700 091
Tel.: 033-66576400

Lucknow
Schneider Electric India (P) Ltd.
Summit, Plot No. TCG 3/3
6th Floor, 604A/B/C, Vibhuti Khand
Gomti Nagar, Lucknow
Uttar Pradesh - 226010
Tel.: 0522-3500334

Ludhiana
Schneider Electric India (P) Ltd.
SCO 23, 2nd Floor,
Chandigarh Road, Sector 32
Ludhiana, Punjab -141010
Tel.: 0161- 5203011

Mohali
Schneider Electric India (P) Ltd.
2nd Floor, Tower-A
Bestech Business Tower
Mega Information & Technology Park
Industrial Plot No.1, Phase IX
(Expansion), Mohali - 160059
Tel.: 0172-7198200

Mumbai
Schneider Electric India (P)(Ltd)
Marwah House, 2nd Floor
Krishanlal Marwah Marg
Andheri (East), Mumbai - 400072
Tel.: 022-62280000

Nagpur
Schneider Electric India (P) Ltd.
6, Vasant Vihar Complex
W.H.C Road, Shankar Nagar
Nagpur - 440010
Tel.: 0712-2558581

Nashik
Schneider Electric India (P) Ltd.
401, 4th Floor, Rishi Raj Towers
Jehan Circle, Gangapur Road
Nashik - 422013
Tel.: 0253-2344333

New Delhi
Schneider Electric India (P) Ltd.
C-56, Mayapuri Industrial Area, Phase-2
New Delhi - 110064
Tel.: 011-61317400

Pune
Schneider Electric India (P) Ltd.
Amar Caliber, CTS No 911, BMCC Road,
OFF F.C. Road, Deccan Gymkhana,
Shivaji Nagar, Pune - 411007
Tel.: 020-67492500

Vadodara
Schneider Electric India (P) Ltd.
Notus IT Park, 10th Floor, Block-D
Sarabhai Campus, Vadiwadi
Vadodara, Gujarat - 390017

Vishakhapatnam
Schneider Electric India (P) Ltd.
D.N.10-1-43, 1st Floor
Ratnam's Business Centre,
Siripuram Fort, C.B.M.Compound
Visakhapatnam - 530016
Tel.: 0891-6675500

Customer Care Centre

Monday-Saturday, 9 a.m. to 8 p.m.
Toll-free numbers: 1800 419 4272, 1800 103 0011
Email: customercare.in@schneider-electric.com

For more information, visit our website at: www.se.com/in

- All Prices are in Indian Rupees.
- Prices are subject to change without prior notice.
- Product evolution is a continuous process and Schneider Electric reserves the right to modify/withdraw any product at any time without prior notice.
- Prices charged will be as prevailing on the date of dispatch.
- Invoice Amount = (MRP – less Applicable discount) + Applicable GST %
- Tax incidence on invoices is basis applicable GST rates.
- Invoice amount not to exceed MRP.
- Product pictures shown are for illustration purpose only, actual product may vary.

Distributor